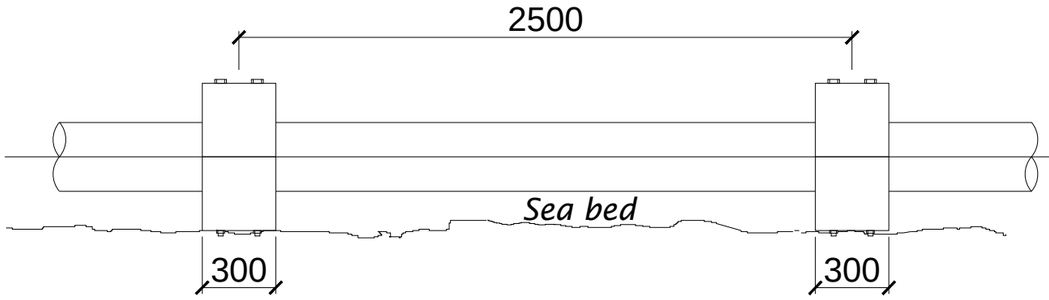

Side Elevation
Scale - 1:25

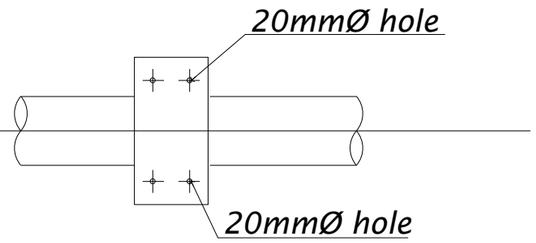

Plan
Scale - 1:25

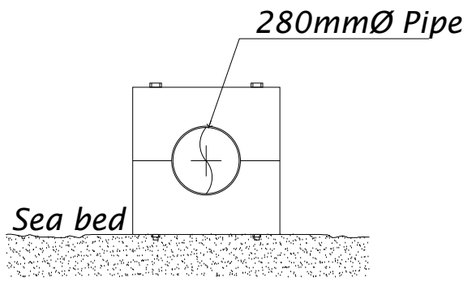

Front Elevation
Scale - 1:25

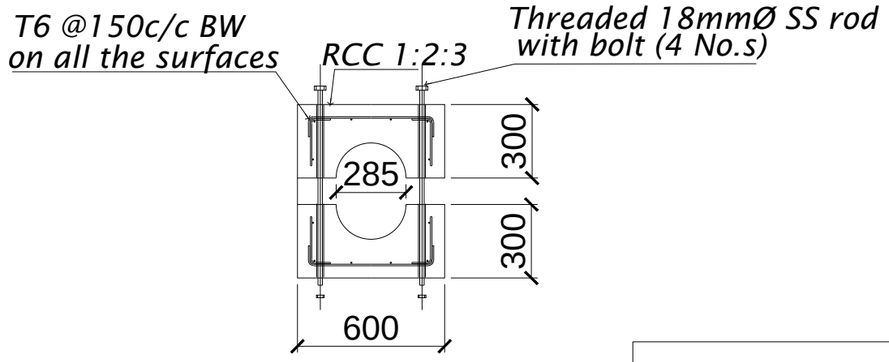

Sectional Elevation
Scale - 1:25

NOTE:
Cover to the reinforcement shall be 75mm
SS rod shall be "SS316" grade

MWSC MALE' WATER & SEWERAGE COMPANY PVT LTD. AMEENEE MAGU, MACHCHANGOLHI MALE' 20-01 REPUBLIC OF MALDIVES Tel: (+960) 323209, Fax: (+960) 324306, E-mail: mwsc@dhivehinet.net.mv	PROJECT: INSTALLATION OF SEA OUTFALL 1 AT GULHIFALHU	SCALE: As Given	DRW NO. : GFSF1-02	DRAWN BY: PAUL	DESIGN BY: MWSC	AMMENDMENTS:
	CONTENTS: Sectional view / Anchor block detail	DATE: 26.01.2012		CHECKED BY:	APPROVED BY:	